Ref: ***DR560-A***
Desoldering Iron

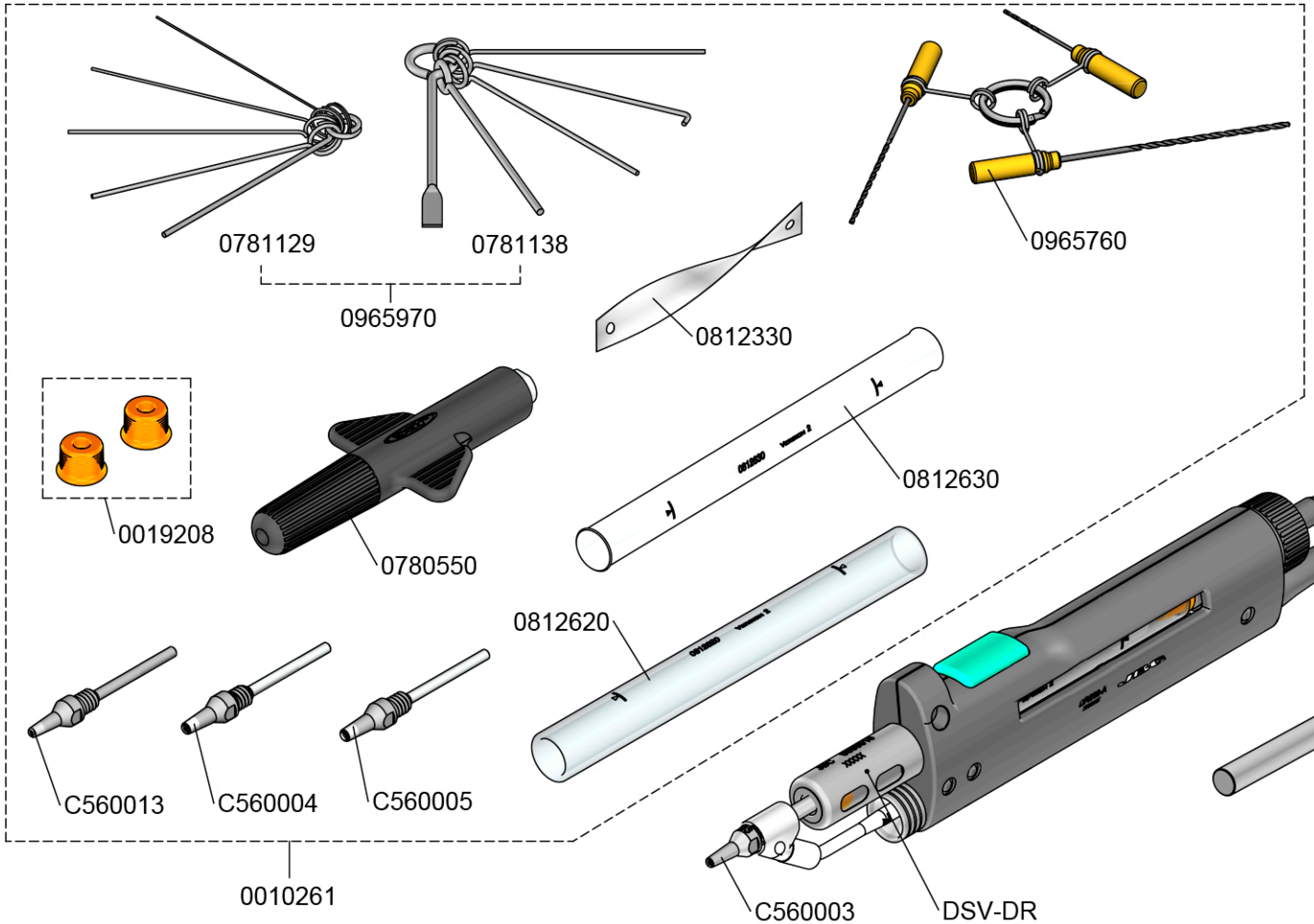

SPARE PARTS	
DR560-A:	
-TIP	C560003
-HEATING ELEMENT	DSV-DR
-FILTER BOX	0780840
-CLEANING STICK	0786640
-FLANGES	0011356
-ACCESSORIES	0010261
·TIP	C560013
·TIP	C560004
·TIP	C560005
·TIP CLEANING SET	0965970
·INTERNAL GASKET	0019208
·SPANNER	0780550
·LONG TIP CLEANING SET	0965760
·METAL TIN DIPOSIT	0812630
·TIN DIPOSIT	0812620
·SPIRAL FILTER	0812330